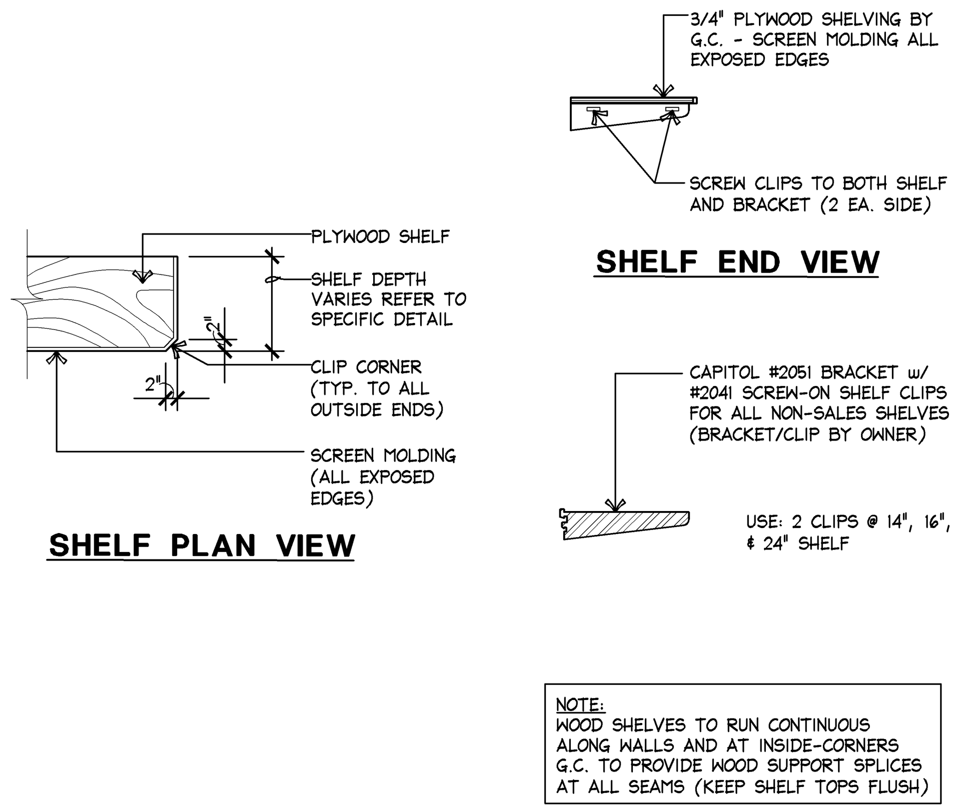

NON-SALES SHELVING DETAILS — N.T.S. 02DA141M0SHLF — **M**

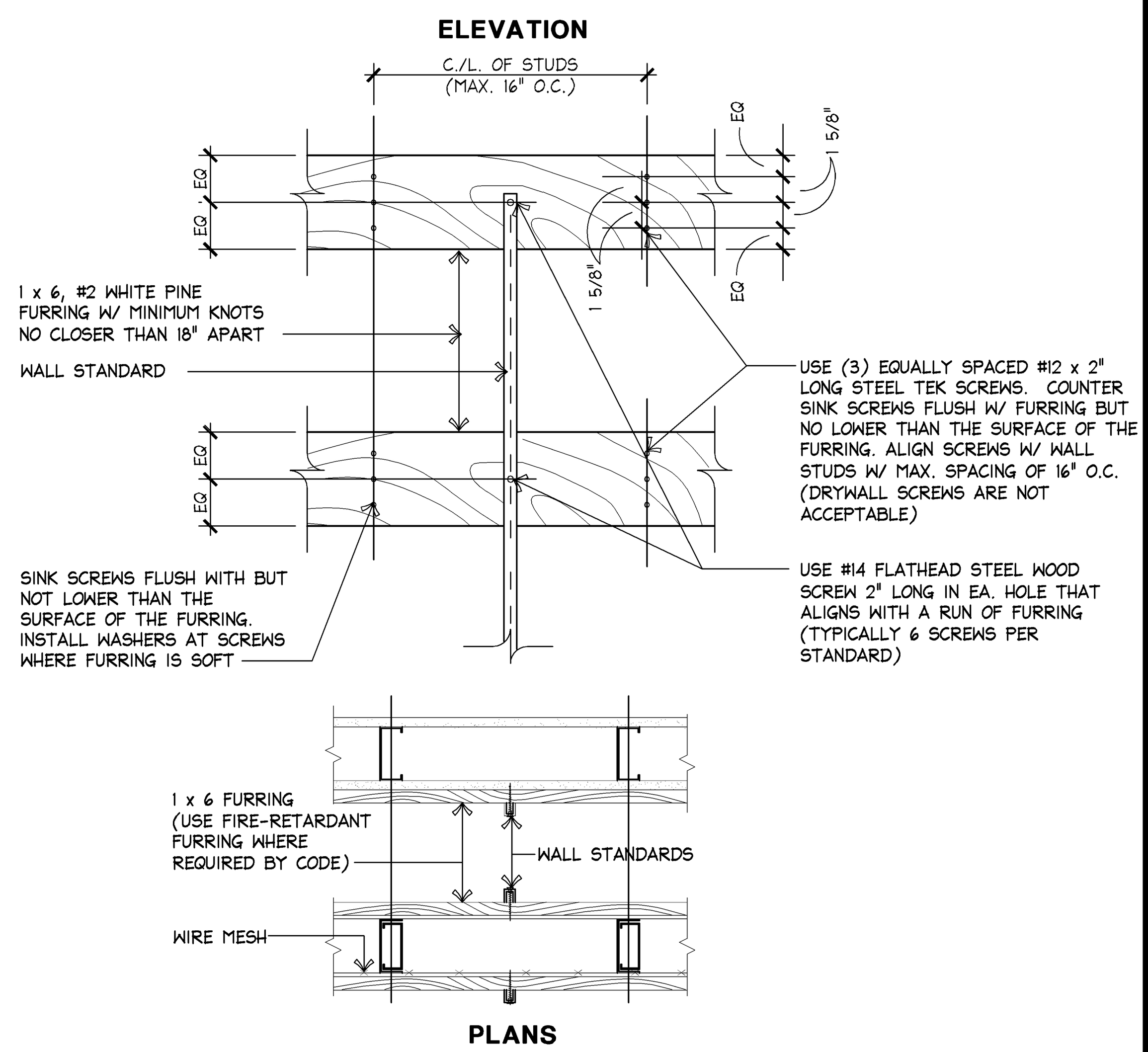

WALL FURRING DETAIL — 1 1/2"=1'-0" 02DA141J0FURR — **J**

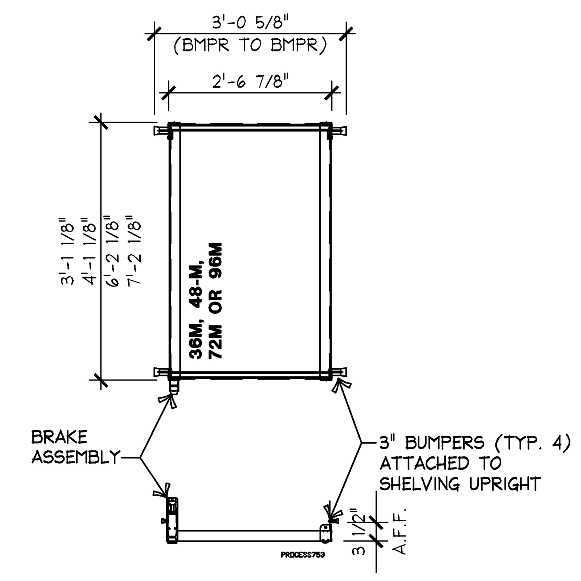

MOVABLE SHELVING CARRIAGE — 1/2" = 1'-0" 02DA141F0CARG — **F**

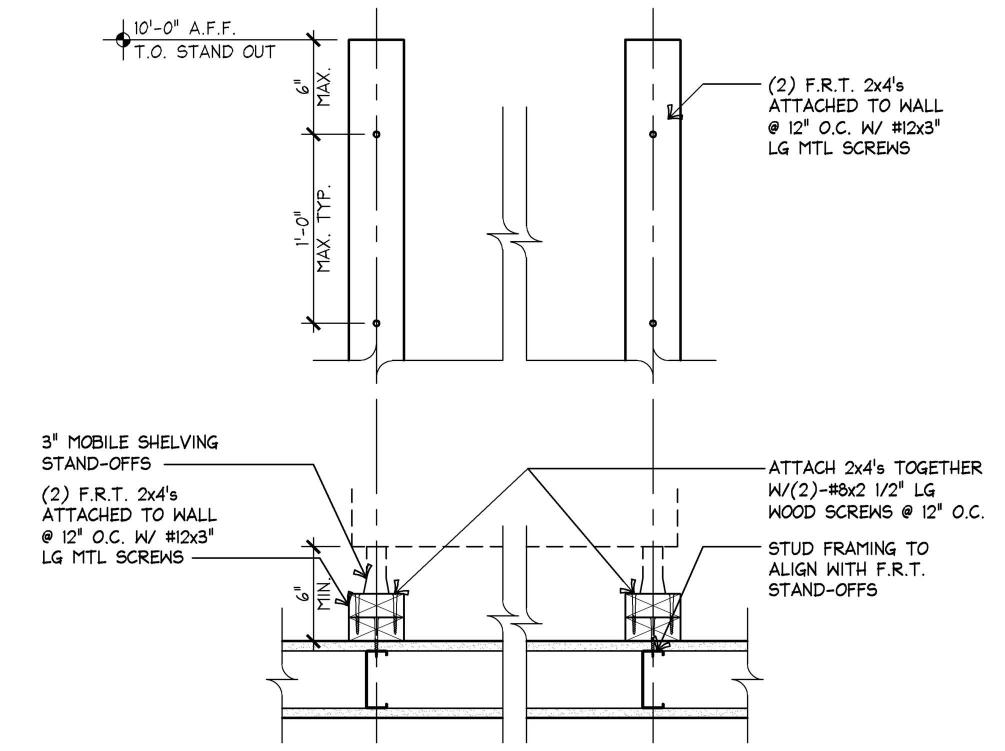

MOVABLE SHELVING STAND-OFFS — 1 1/2" = 1'-0" 02DA141C0DETL — **C**

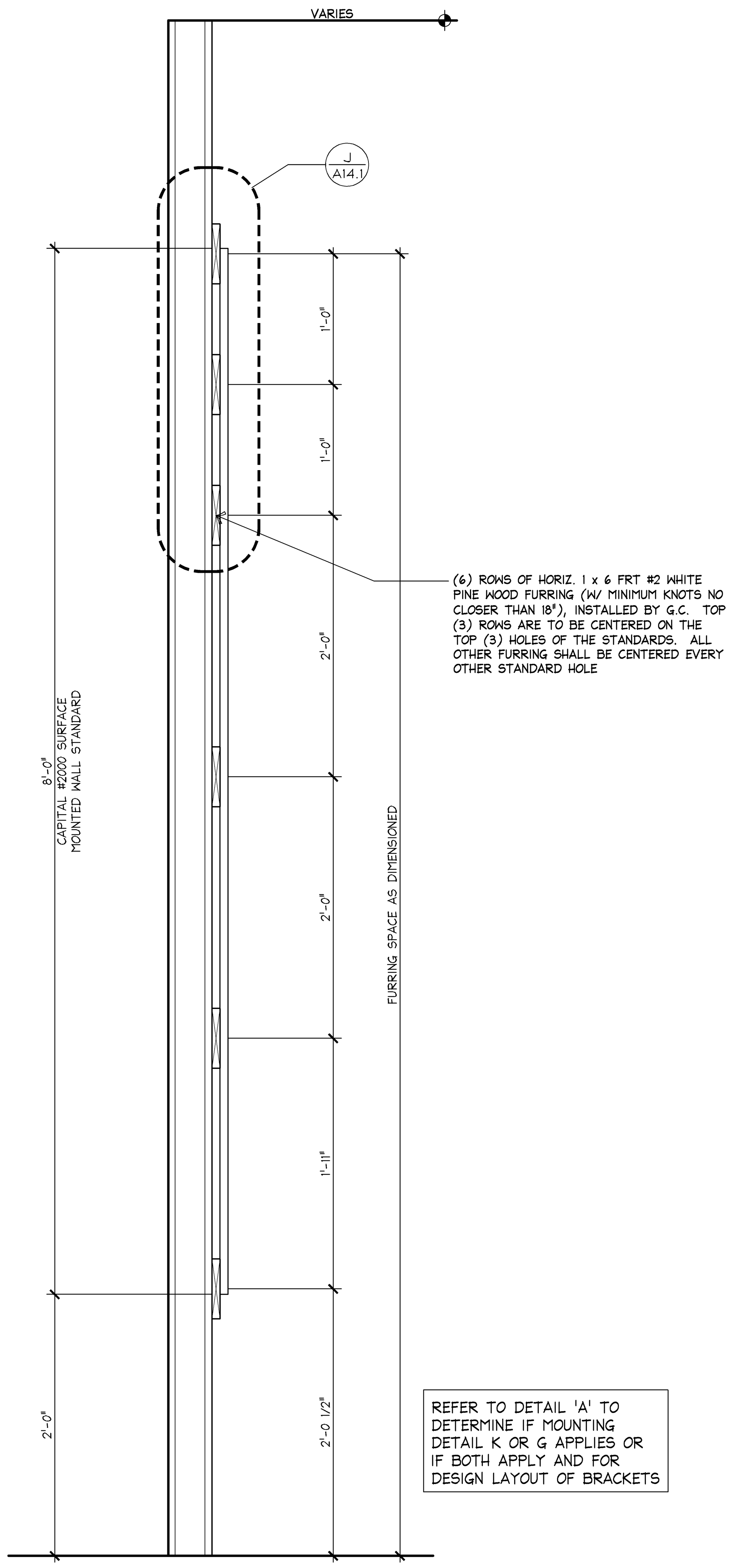

STANDARDS & BRACKETS SECTION — 1 1/2"=1'-0" 02SA141K0STNB — **K**

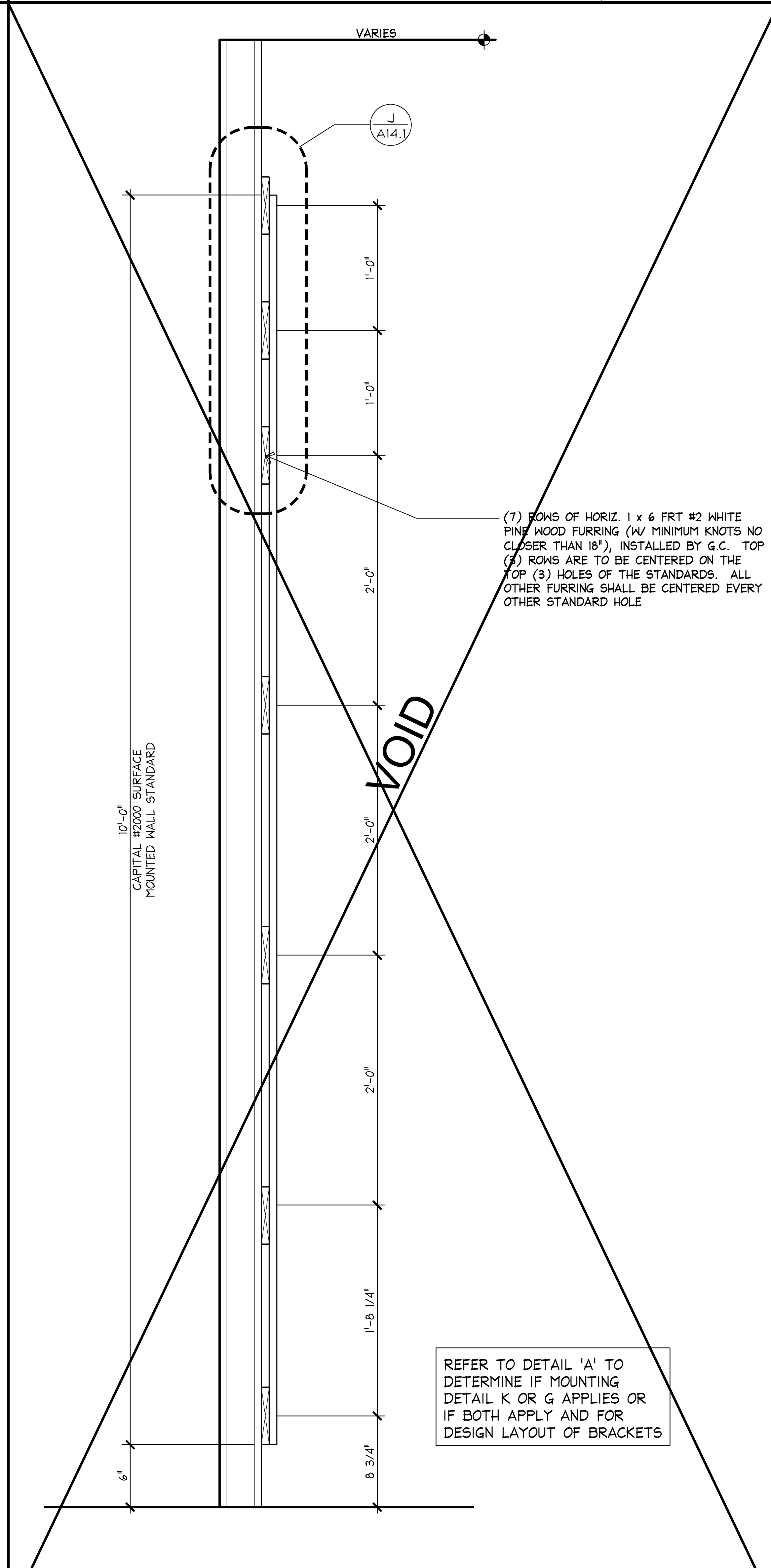

STANDARDS & BRACKETS SECTION — 1 1/2"=1'-0" 02SA141G0STNB — **G**

NOTE:
DETAILS SHOWN ARE FOR REFERENCE ONLY AND NOT FOR CONSTRUCTION. REFER TO MANUF. INSTALLATION INSTRUCTIONS.

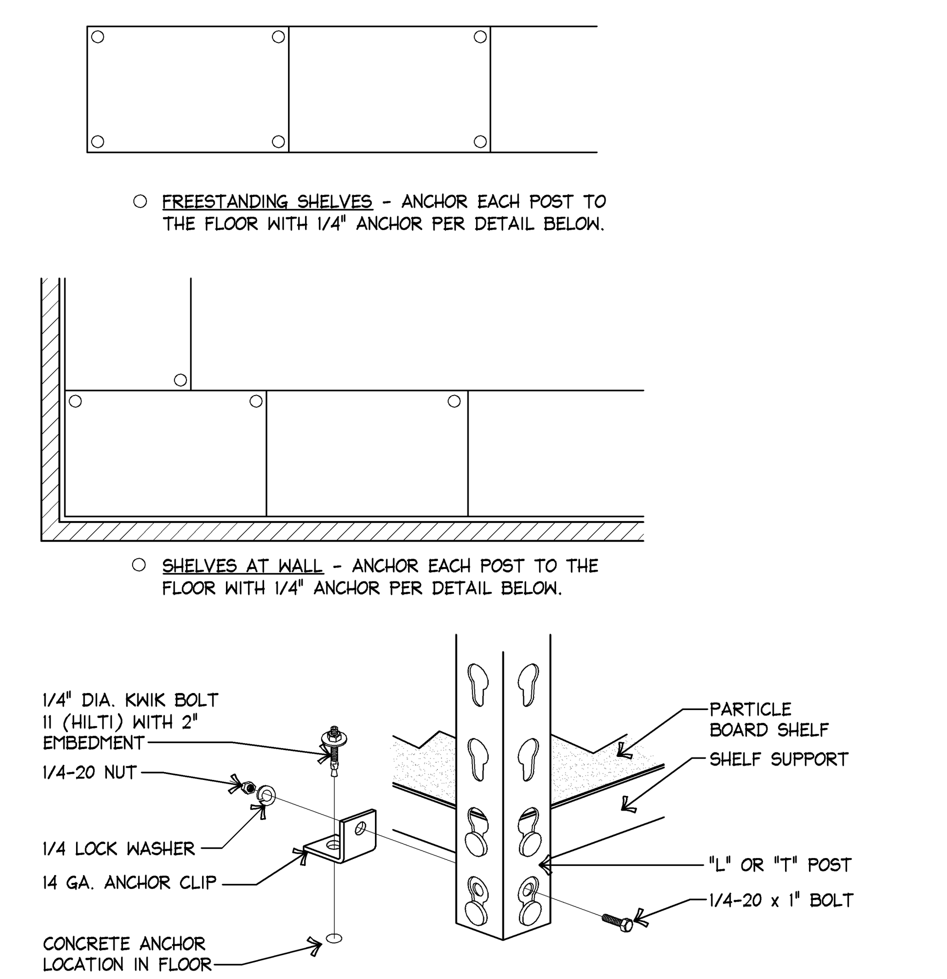

RIVET RACK - ANCHOR DETAIL — 3"=1'-0" 02DA141E0ANCH — **E**

NOTE:
DETAILS SHOWN ARE FOR REFERENCE ONLY AND NOT FOR CONSTRUCTION. REFER TO MANUF. INSTALLATION INSTRUCTIONS.

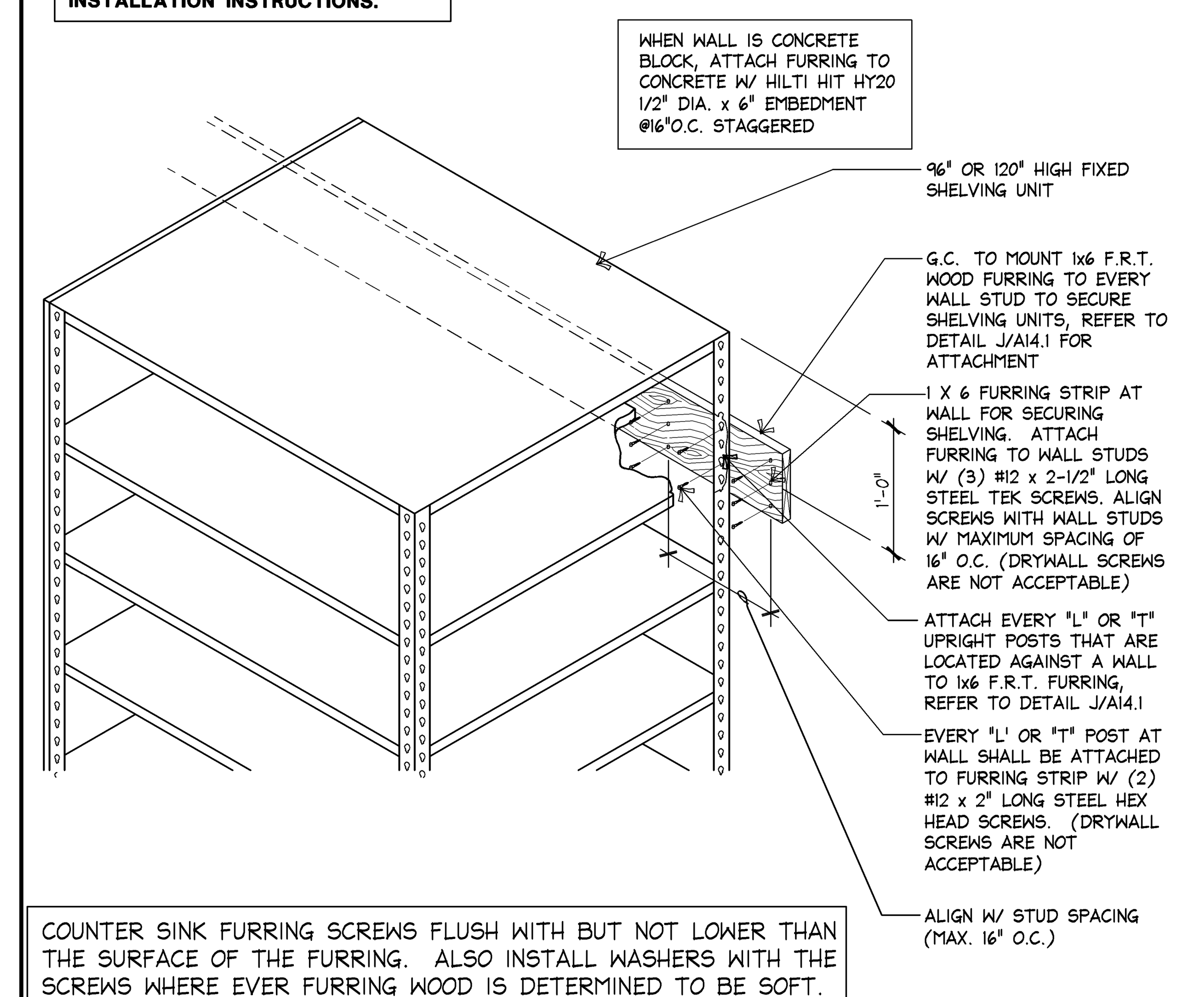

COUNTER SINK FURRING SCREWS FLUSH WITH BUT NOT LOWER THAN THE SURFACE OF THE FURRING. ALSO INSTALL WASHERS WITH THE SCREWS WHERE EVER FURRING WOOD IS DETERMINED TO BE SOFT.

RIVET RACK - FIXED AT WALL — 1"=1'-0" 023A141B0FURR — **B**

GENERAL NOTES:

1. NO SUBSTITUTIONS WILL BE PERMITTED ON ANY OF THE MATERIALS OR HARDWARE SPECIFIED IN THESE DETAILS.
2. ANYTIME HANGROD IS CUT IN FIELD, GENERAL CONTRACTOR MUST DRILL NEW HOLE AT CUT END FOR DROP-IN PIN.
3. THERE ARE TO BE NO SUBSTITUTES FOR MELAMINE WHEN MAKING SHELVES.
4. ALL SHELF MOUNTING HARDWARE, HANGRODS AND WALL STANDARDS ARE SUPPLIED BY OWNER - INSTALLED BY G.C.
5. G.C. TO FURNISH AND INSTALL ALL SHELVES W/ SCREEN MOLDING AT ALL EXPOSED EDGES AS SHOWN ON DTL. M/A14.1.

①	(6) ROWS HORIZONTAL 1X6 WOOD FURRING - FURRING IS TO BE SPACED PER DTL K/A14.1 SO THAT THE FURRING IS CENTERED AT EACH TOP (3) HOLES OF THE STANDARD AND EVERY OTHER HOLE TO THE BOTTOM OF THE STANDARD. REFER TO FURRING AND WALL STANDARD INSTALLATION DETAIL. FURRING TO BE #2 WHITE PINE W/ MINIMUM KNOTS NO CLOSER THAN 18 INCHES APART.	⑦	HANGROD BRACKET DIRECTLY BELOW SHELF BRACKET - MUST BE INSTALLED PRIOR TO FASTENING MOUNTING CLIPS TO SHELVES ON BRACKETS ABOVE.
		⑧	WALL STANDARDS - G.C. TO CUT TO LENGTH & INSTALL TO FURRING STRIPS - SEE DETAIL J/A14.1
②	24" DEEP SHELF BY G.C.	⑨	WALL STANDARDS - G.C. TO CUT TO LENGTH & INSTALL TO SOLID IN-WALL BLOCKING. USE #4 x 2" LONG STEEL COUNTERSUNK WOOD SCREWS IN EVERY SCREW HOLE IN THE WALL STANDARD.
③	14" DEEP SHELF BY G.C.		
④	3/4" WHITE MELAMINE SHELVES W/ PAINTED FRONT EDGE AND 3/4" HDF WITH ROUTED BULLNOSE EDGE.	⑩	G.C. IS TO LOCATE (2) 16 GA. STUDS @ 24" O.C. CENTERED BEHIND W.C. FOR ATTACHING WALL STANDARDS. ADD ADDITIONAL WALL STUDS AS NEEDED TO ENSURE ADEQUATE BLOCKING FOR WALL STANDARDS IN SINK RM. & OFFICE.
⑤	SHELF BRACKETS AND HOLD-DOWN CLIPS		
⑥	HANGROD BRACKET WITH SADDLE END, HANGROD AND END CAPS	⑪	QUAD. ELECTRICAL OUTLETS FOR WALKIES (WHERE OCCURS)

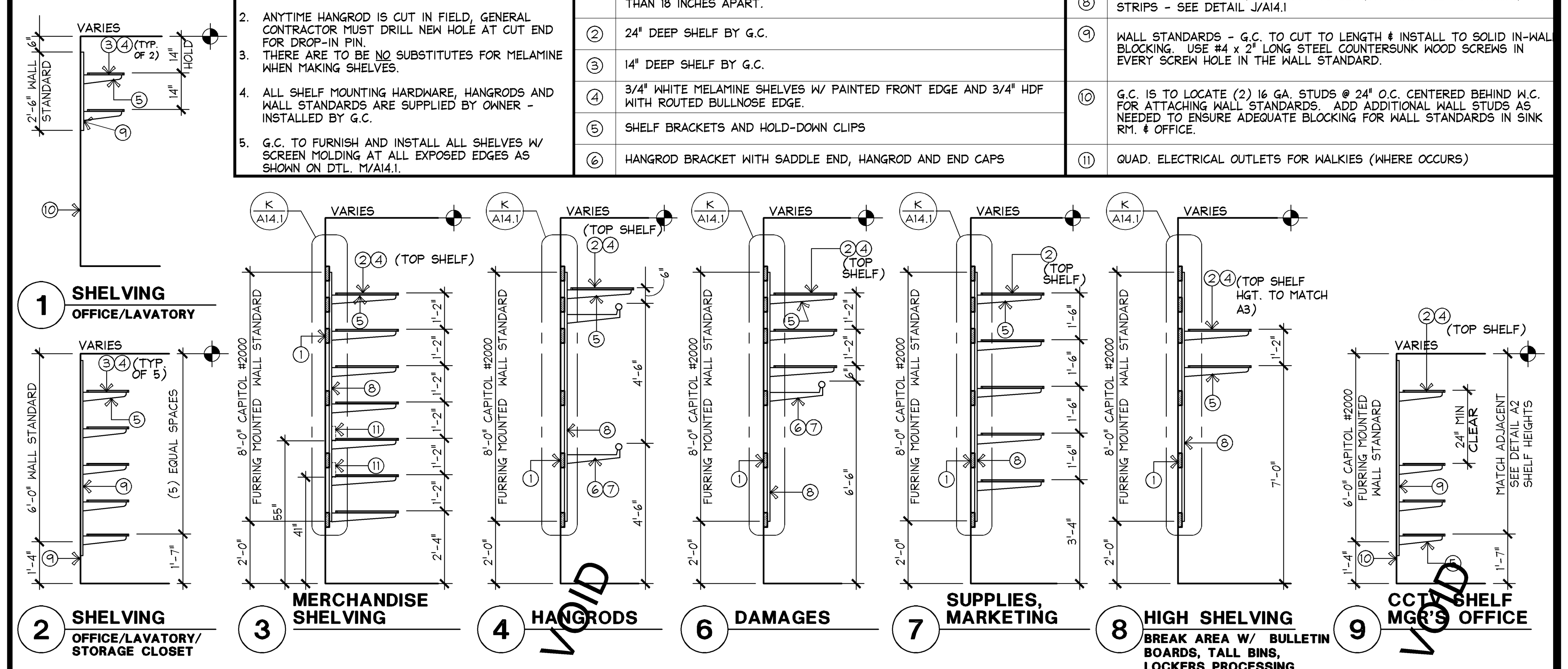

STANDARDS AND BRACKETS DETAILS — N.T.S. 02SA141A0SHLV — **A**

EXPRESS
EXPRESS FASHION OPERATIONS, LLC
d/b/a STORE DESIGN & CONSTRUCTION
1 Express Drive Columbus, Ohio 43230
Telephone: 614.474.4001 · Express.com

PROHIBITION ON REUSE:
THESE DRAWINGS AND SPECIFICATIONS WERE PREPARED FOR USE ON A SPECIFIC SITE CONTEMPORANEOUSLY WITH THEIR ISSUE DATE. THEY ARE NOT INTENDED FOR USE ON A DIFFERENT PROJECT SITE OR AT A LATER TIME. REUSE OF THESE DRAWINGS AND SPECIFICATIONS, OR ANY REPRODUCTION THEREOF, ON ANOTHER PROJECT IS PROHIBITED AND CONTRARY TO LAW UNLESS EXPRESSLY AUTHORIZED IN WRITING BY EXPRESS STORE PLANNING, INC., D/B/A EXPRESS STORE DESIGN AND CONSTRUCTION ("ESDC").
THESE DRAWINGS AND SPECIFICATIONS ARE THE PROPERTY OF ESDC AND SHALL NOT BE DISPLAYED IN ANY MANNER OR USED ON ANY OTHER PROJECT EXCEPT BY WRITTEN AGREEMENT WITH ESDC. NO REPRODUCTION OF THESE DRAWINGS AND SPECIFICATIONS SHALL BE MADE WITHOUT THE WRITTEN AUTHORIZATION OF THE ESDC. ALL ORIGINALS OR REPRODUCTIONS OF THESE DRAWINGS AND SPECIFICATIONS MUST BE RETURNED TO ESDC UPON COMPLETION OF THEIR INTENDED USE, UNLESS OTHERWISE AGREED BY THE ESDC.
COPYRIGHT NOTICE:
THESE DRAWINGS AND SPECIFICATIONS ARE COPYRIGHTED AND SUBJECT TO COPYRIGHT PROTECTION AS AN "ARCHITECTURAL WORK" UNDER SEC. 102 OF THE COPYRIGHT ACT, 17 U.S.C. AS AMENDED DECEMBER 1990; KNOWN AS THE ARCHITECTURAL WORKS COPYRIGHT PROTECTION ACT OF 1990. THE PROTECTION INCLUDES, WITHOUT LIMITATION, THE OVERALL FORM, ARRANGEMENT AND COMPOSITION OF SPACES, AND ELEMENTS OF THE DESIGN. UNDER SUCH PROTECTION, UNAUTHORIZED USE OF THESE DRAWINGS AND SPECIFICATIONS MAY RESULT IN CESSATION OF CONSTRUCTION, BUILDING SEIZURE, AND/OR MONETARY LIABILITY.

712

PROJECT INFORMATION:
EXPRESS
SPRINGFIELD TOWN CENTER
6847 SPRINGFIELD MALL
SPACE NO.: 6847
SPRINGFIELD, VA 22150

SCOPE:	NEW	PACKAGE: PKG B
DESIGN TYPE:	DG	GENERATION: FALL 2014
ESD&C PROJECT #:	94869	A/E PROJECT #: 130832

REVISIONS:

	REQUIRED BY:	DATE
1*		03/13/14
2*		04/09/14
3*		05/06/14

* INDICATES NO REVISION TO THIS SHEET

SHREMSHOCK
Shremshock Architects, Inc.
6130 S. Sunbury Rd. Westerville, OH 43081
t: 614 545 4550 | f: 614 545 4555 | shremshock.com
Gerald S. Shremshock, Architect
Timothy J. Shremshock, Architect

ELITE CONSTRUCTION GROUP
LAKE JACKSON, TX
PHONE: 979-285-0712
NOTE: THESE PRINTS HAVE BEEN REDUCED BY 50 PERCENT. SCALE WILL BE 50 PERCENT OF WHAT IS NOTED ON PLANS

DATE ISSUED:	02/14/2014
DESIGNED BY:	JB
DRAWN BY:	AEM
CHECKED BY:	KMM

STOCKROOM SHELVING DETAILS

DRAWING NUMBER:
A14.1